Lifetime of high-*k* gate dielectrics and analogy with strength of quasibrittle structures

Jia-Liang Le,[1] Zdeněk P. Bažant,[1,2,a)] and Martin Z. Bazant[3]
[1]*Department of Civil and Environmental Engineering, Northwestern University, 2145 Sheridan Road, Evanston, Illinois 60208, USA*
[2]*Department of Materials Science, Northwestern University, 2145 Sheridan Road, Evanston, Illinois 60208, USA*
[3]*Department of Chemical Engineering and Department of Mathematics, Massachusetts Institute of Technology, Cambridge, Massachusetts 02139, USA*

(Received 1 July 2009; accepted 1 October 2009; published online 24 November 2009)

The two-parameter Weibull distribution has been widely adopted to model the lifetime statistics of dielectric breakdown under constant voltage, but recent lifetime testing for high-*k* gate dielectrics has revealed a systematic departure from Weibull statistics, evocative of lifetime statistics for small quasibrittle structures under constant stress. Here we identify a mathematical analogy between the dielectric breakdown in semiconductor electronic devices and the finite-size weakest-link model for mechanical strength of quasibrittle structures and adapt a recently developed probabilistic theory of structural failure to gate dielectrics. Although the theory is general and does not rely on any particular model of local breakdown events, we show how its key assumptions can be derived from the classical dielectric breakdown model, which predicts certain scaling exponents. The theory accurately fits the observed kinked shape of the histograms of lifetime plotted in Weibull scale, as well as the measured dependence of the median lifetime on the gate area (or size), including its deviation from a power law. The theory also predicts that the Weibull modulus for breakdown lifetime increases in proportion to the thickness of the oxide layer and suggests new ideas for more effective reliability testing. © *2009 American Institute of Physics*. [doi:10.1063/1.3256225]

I. INTRODUCTION

Electrical breakdown has been a major reliability issue in the design of gate dielectrics. High-*k* gate dielectrics, such as Al_2O_3, HfO_2, Si_3O_4, ZrO_2, etc., have recently been adopted in the design of metal-oxide-semiconductor field effect transistor as an attractive alternative to the conventional SiO_2 native oxide gate dielectrics, in order to reduce current leakage and increase the gate capacitance. These high-*k* dielectrics are known as "trap-rich" materials. The trapping of electrons in the gate oxide layer induces the trap-assisted tunneling process, which leads to the gate leakage current at a low voltage.[1–3] When the trap (or defect) density reaches a certain critical value, a weak localized breakdown path between the gate electrode and the substrate is formed, which is called the soft breakdown (SBD). The Joule heating in the local breakdown path then causes lateral propagation of the leakage spots and eventually leads to a significantly increased tunneling current passing through the layer, which is called the hard breakdown (HBD).[1]

The reliability of gate dielectrics is usually assessed by applying a constant gate voltage stress and measuring the breakdown lifetime or the total charge to breakdown (i.e., the integral of the tunneling current over the lifetime).[2,4] Recently, histogram testing for both SBD and HBD has been used to determine the cumulative distribution function (cdf) of breakdown lifetime of high-*k* gate dielectrics under constant voltage stresses. The histograms consistently show systematic deviations from the two-parameter Weibull distribution. The data points in Fig. 1, plotted in the Weibull scale (in which the Weibull cdf is a straight line of slope equal to the Weibull modulus m), show, for both SBD and HBD under constant voltage, Kim and Lee's[2] data for HfO_2 based gate dielectrics of area $A=0.0016\ \mathrm{mm}^2$ and thickness of about 4.8–5 nm, or the equivalent oxide thickness (EOT) $h=1.4$ nm (EOT=thickness of SiO_2 gate oxide for which the gate capacitance would be the same as it is for the gate high-*k* gate dielectrics).

Kim and Lee also observed the effect of gate area A, i.e., the size effect, on the median lifetime τ_{50} (time to 50% failure frequency), shown in Fig. 2. According to the Weibull theory, the size effect should be a power law with exponent of $-1/m$, i.e., the data plotted in double logarithmic scales should fit straight lines with slope of $-1/m$. However, despite a relatively narrow range of A, one can discern systematic, though slight, deviations. Here we attempt a theoretical explanation.

The field where the Weibull distribution has originally been applied is the strength and lifetime of brittle structures. The Weibull cdf worked well as long as the ratio of structure size D to size of the representative volume of material (RVE) was large (the RVE size is typically equal to 2–3 inhomogeneity sizes). However, when the theory was extended to structures containing fewer than 10^4 RVEs, systematic deviations, strikingly similar to those in Fig. 1, were observed. Recently, such deviations were successfully handled by a

a)Electronic mail: z-bazant@northwestern.edu.

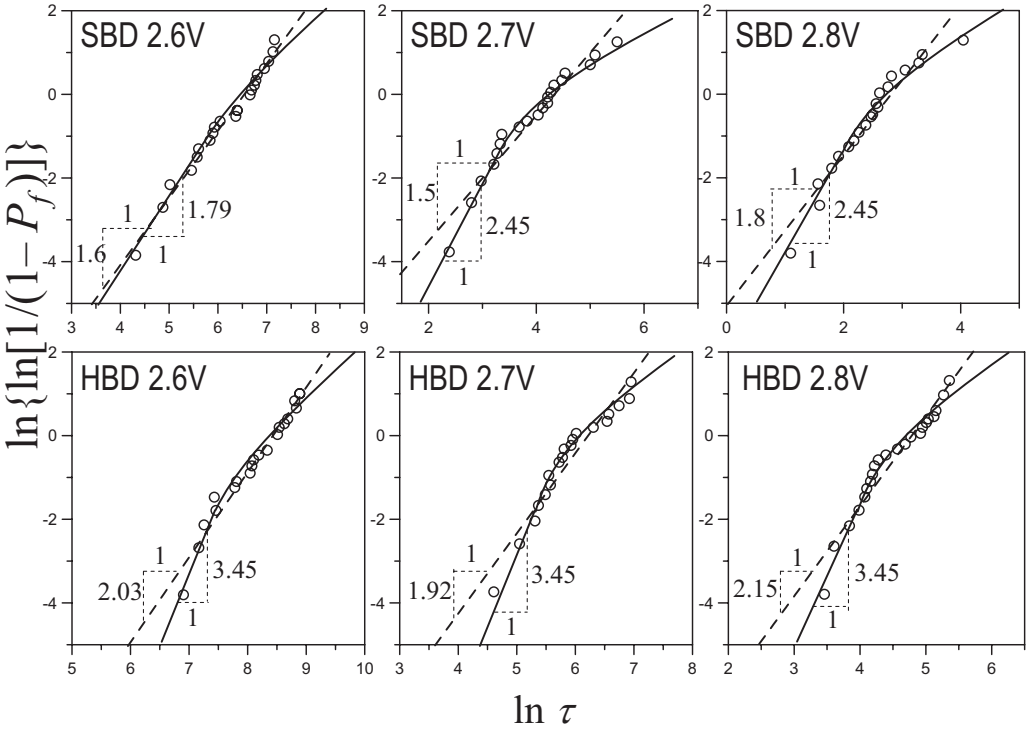

FIG. 1. Optimum fit of lifetime histograms of high-k gate dielectrics.

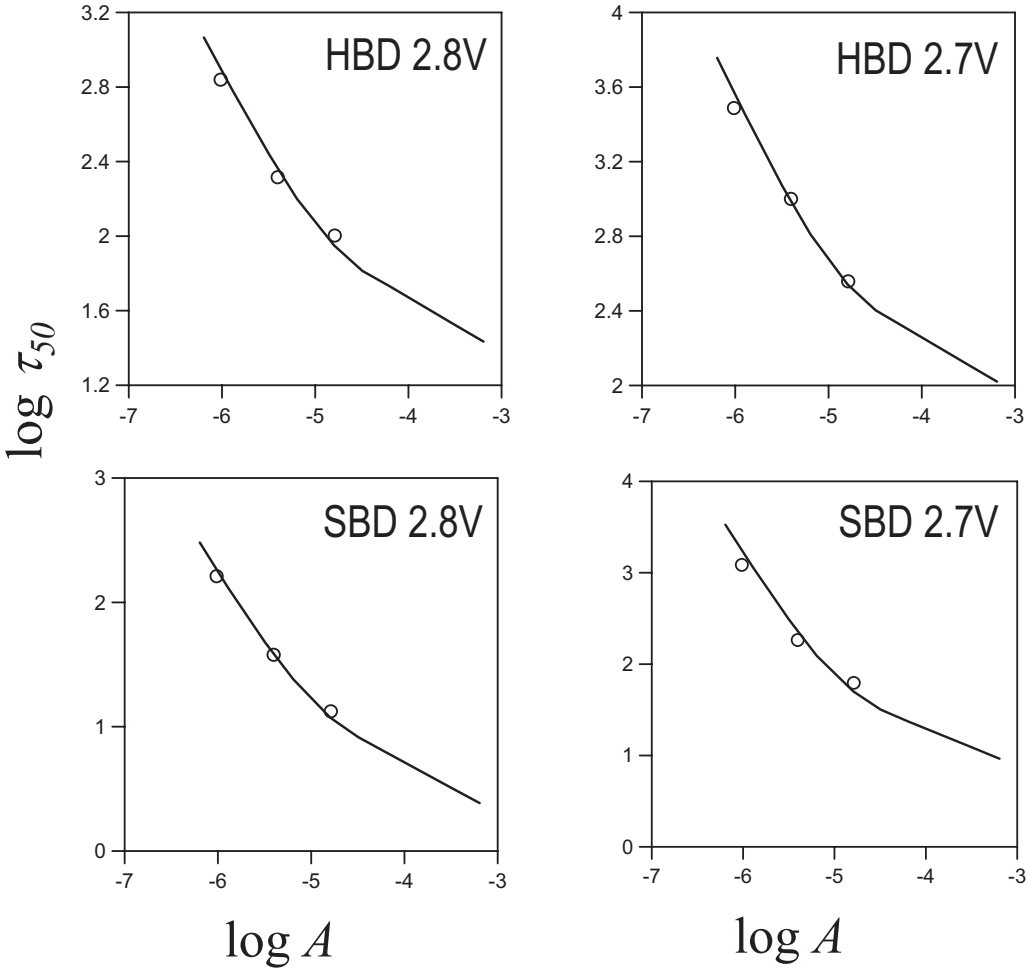

FIG. 2. Size effect on the median of lifetime.

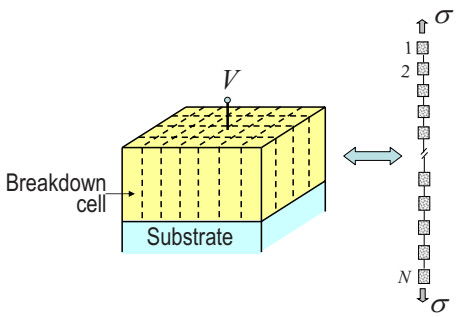

FIG. 3. (Color online) Weakest-link model for gate dielectrics.

comprehensive theory[5–12] which predicts both the strength and lifetime cdf's, the size effect on both of them, and the subcritical crack growth rate.

In this paper, we exploit an analogy between the dielectric breakdown due to applied voltage and the failure of quasibrittle structures under applied stress to motivate a fiber-bundle-like statistical model for breakdown statistics. In Sec. II, we develop this analogy and apply it to the breakdown probability, and in Sec. III, we extend the theory to lifetime statistics. Although our theory is based on general notions of parallel and series couplings of capacitors, which become resistors upon local breakdown,[13,14] in principle, its key assumptions can also be connected to microscopic statistical models,[15] such as the original dielectric breakdown model (DBM) of Niemeyer *et al.*[16] as well as more recent percolation models developed for gate dielectrics.[4,17,18] In Sec. IV, we test predictions of the theory against the experimental data for the breakdown of high-*k* gate dielectrics.

II. BREAKDOWN PROBABILITY

A. Analogy with strength of quasibrittle materials

The Weibull distribution is based on the weakest-link model of structural strength, σ^*, in which the links (numbered $i=1,2,\ldots,N$), coupled in series, simulate the RVEs of material (only structure geometries for which the failure of one RVE causes the whole structure to fail are considered). So, $\sigma^*=\min_i(\sigma_i^*)$, where σ_i^*=strengths of the individual RVEs. Likewise, the gate dielectric may be divided into a number of potential breakdown cells ($i=1,2,\ldots,N$) (Refs. 19 and 20) (Fig. 3), and applicability of the Weibull cdf implies that the gate fails when the weakest cell, with the smallest breakdown voltage V^*, allows the tunneling current to pass. This is similar to the weakest-link model since $V^*=\min_i(V_i^*)$, where V_i^*=voltage required for breakdown of cell i.

These conditions of minima show that the series coupling in strength mechanics corresponds to the parallel coupling of potential electric breakdown cells. This analogy is further evidenced by comparing the relations $\epsilon=\Sigma_i(\epsilon_i)$ and $\sigma_i=\sigma$ (all i) for series coupling in strength mechanics to the relations $I=\Sigma_i(I_i)$ and $V_i=V$ (all i) for parallel coupling of potential breakdown cells (in practice, of course, there are no perfect insulators; there is always some small current passing through the dielectric); $\sigma,\sigma_i,\epsilon,\epsilon_i$=overall and local stresses and deformations in the chain and its links, and V,I,V_i,I_i are the overall voltage and current, and the voltage and current in the ith cell. To complete the analogy, note that, vice versa, the parallel coupling in structural mechanics corresponds to a series coupling of potential breakdown cells, which is evidenced by comparing the relations $\sigma=\Sigma_i(\sigma_i)$ and $\epsilon_i=\epsilon$ (all i) for parallel coupling in structural mechanics to the relations $V=\Sigma_i(V_i)$ and $I_i=I$ (all i) for series coupling of potential breakdown cells.

A chain survives if all its links survive, and a gate dielectric suffers no breakdown if none of the cells suffers a breakdown. If the links are statistically independent (i.e., larger than relevant autocorrelation lengths of the random breakdown voltage field in the material), the probability of mechanical failure and the probability of dielectric breakdown are given by similar equations,

$$P_f(\sigma,\tau)=1-[1-P_1(\sigma,\tau)]^N \quad \text{(mechanical failure)}, \quad (1)$$

$$P_f(V,\tau)=1-[1-P_1(V,\tau)]^N \quad \text{(dielectric breakdown)}, \quad (2)$$

where stress σ and voltage V are considered to be uniform for all the links and cells, and τ is a parameter representing the duration of applied load or voltage. For a fixed τ, the distributions $P_1(\sigma,\tau)$ and $P_1(V,\tau)$ represent the failure or breakdown probability as a function of σ or V in each individual RVE or in each individual cell. From the theory of statistics of extremes,[21,22] it is well known that the distributions P_f must tend to a Weibull form in the asymptotic limit of large N, but the weakest-link model with $N\to\infty$ is often an oversimplification. Below, we will consider finite N as well as more general couplings for each independent cell, which lead to predictable deviations from the Weibull distribution.

In general, to determine the failure or breakdown probability P_f, one needs to know the entire strength or breakdown voltage distribution P_1 of one RVE or one potential breakdown cell. In the case of mechanical strength, theoretical and numerical studies which provided excellent agreement with experiments[5,6,8,9] indicate that the strength distribution of one RVE, $P_1(\sigma,\tau)$, can be approximately described as a renormalized Gaussian cdf onto which a power-law tail is grafted (while preserving continuity of cdf and its slope) at grafting point $P_g\approx 10^{-4}-10^{-3}$; see Eqs. (50) and (51) in Ref. 6. This grafted cdf ensues from atomistic fracture mechanics, which dictates that the cdf of mechanical strength on the nanoscale must follow a power-law function with exponent 2.[8,10] For the purpose of statistics, the transition from the nanoscale to the RVE on the macroscale has been represented by a hierarchical series and parallel couplings (Fig. 2 in Ref. 8). Based on the strength distribution and on the power law for creep crack growth, which gives the subcritical crack growth rate as a power function of stress intensity factor K (with exponent q), it has been shown[10] that the distribution of lifetime τ of one RVE [i.e., $P_f(\sigma,\tau)$ at fixed σ] has a power-law tail of exponent $m_\tau=m/(1+q)$. This tail is limited approximately to $P_f<P_g$, where $P_g\approx 10^{-4}-10^{-3}$.

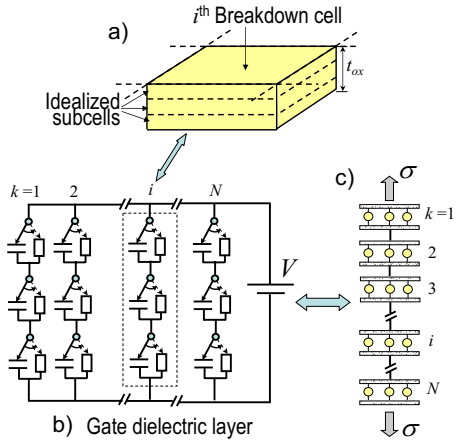

FIG. 4. (Color online) Analogy of dielectric breakdown and structural failure.

Now we try to use a similar approach to describe the distribution, $P_1(V,\tau)$, of the breakdown voltage and lifetime for one cell.

B. Application to dielectric breakdown

The gate oxide layer may be imagined to consist of a large number of potential breakdown cells[4,19,20] (Fig. 3). Upon voltage application, electrons or holes are injected into the oxide layer, and microscopic defects (electron or hole traps), whose size is set by typical distances for quantum tunneling, are generated in the layer. When the density of these defects first reaches a critical value in one of the cells, dielectric breakdown occurs. In other words, similar to a RVE, each cell is the smallest material volume whose breakdown triggers the breakdown of the whole gate dielectric.

Various percolation models have been proposed to study gate dielectric breakdown numerically.[4,17,18] From optimum fitting of experimental observations, it has been inferred that the effective size of the defects is about 2–3 nm, although the physical extent of the defect might be smaller.[4]

Now imagine that each cell consists of $n=t_{ox}/l_0$ subcells, where t_{ox}=thickness of the oxide layer and l_0=effective thickness of a subcell [Fig. 4(a)]. The breakdown of the cell occurs as soon as each subcell attains a failure criterion, such as a critical defect density related to a percolating path of defects (see below). Before the breakdown, each subcell functions as a capacitor (or, more precisely, as the parallel coupling of a capacitor and a resistor whose resistance is very large, in fact so large that the resistor could be neglected). When the number of defects is sufficiently large, the subcell begins to function as a resistor[14] (or a very large capacitance[13]) which can conduct a significant current [Fig. 4(b)]. Since the electric breakdown of one cell occurs when all these subcells break down, the cell can be modeled as a series coupling of capacitors. Each capacitor represents one subcell, and the capacitor can be switched to a resistor if the number of defects in the subcell is large enough [Fig. 4(b)].

Note again an analogy between the series coupling of dielectric breakdown and the parallel coupling in the mechanical failure of structures. To get breakdown, all of the capacitors coupled in series must switch to resistors [Fig. 4(b)]. Switching any capacitor to a resistor causes the electric field (voltage) to redistribute among the remaining capacitors.

This voltage redistribution is analogous to the mechanics of failure in a parallel coupling of structural elements (called fiber bundle), where the failure of each element causes the applied load (or stress) to redistribute among the remaining elements [Fig. 4(c)].[6] Regardless of the mechanical behavior of each element, the strength cdf of a bundle has the same asymptotic properties. (1) If the strength distribution of each element follows a cdf with power-law tail, the strength distribution of bundle will also have a power-law tail with its exponent equal to the sum of power-law exponents of the cdf tails of all the elements. (2) When the number of elements increases, the core of cdf of bundle strength quickly approaches the Gaussian distribution regardless of the cdf of the strength of each element . (3) The power-law tail gets drastically shortened when the number of elements increases, roughly as $P_{tn}\sim(P_{t1}/n)^n$ (where P_{t1} and P_{tn} are the probabilities to which the power-law tails extend for one element and for the bundle with n elements, respectively).[5]

Since each potential breakdown cell can be modeled as a series coupling of capacitors, which is analogous to the fiber-bundle model for the structural failure, it is obvious that the breakdown voltage distribution of the cell must have a Gaussian distribution except for the far-left tail. Recent histogram testing of the breakdown voltage shows that the breakdown voltage of high-k dielectrics follows the Weibull distribution except for the medium and high probability regimes.[2] In view of Eq. (2), this means that the tail of $P_1(V)$ must be a power law, i.e., $P_1(V)\sim c_0V^m$. Furthermore, since the power-law tail of strength cdf of the fiber-bundle model is indestructible, the distribution of breakdown voltage of each subcell (i.e., of the voltage generating a critical density of defects in each subcell) must have a power-law tail as well; $P_l(V)=cV^p$.

C. Microscopic statistical models

Our "mesoscopic" statistical theory of dielectric breakdown, based on the analogy with fiber-bundle models of mechanical strength, is very general, but it cannot predict the "microscopic" characteristics of individual subcells, which are the statistically independent elements of the bundle network. Microscopic breakdown statistics can be inferred from experimental data, assuming the statistical couplings of the bundle model, as we have just done to infer a power-law tail for $P_1(V)$ and $P_l(V)$ from the observed Weibull tail of the breakdown voltage distribution for high-k gate dielectrics. Conversely, microscopic physical models can be developed for single subcell properties, which can then be used to predict or extrapolate experimental data via the network couplings.

For gate dielectrics, some previous microscopic models have employed percolation theory to connect the electron-trapping defect density ρ to the probability of breakdown via a spanning defect cluster in a finite system.[4,17,18] For very thin gate dielectrics, recent mathematical results could also be used to describe the smoothed percolation transition from

nonspanning to spanning clusters in a small finite system.[23–25] A difficulty with this approach, however, is that it requires additional input to describe the dynamics of breakdown ($d\rho/dt$) in response to the local applied voltage $V_a(t)$. Such time dependence (discussed below) is obviously crucial for any theory of lifetime statistics, but the voltage dependence ($d\rho/dV_a$) would also be required to predict the statistics of the breakdown voltage during a voltage ramp, by analogy with the mechanical strength of a structure (defined as the failure stress after a loading ramp). Another general difficulty with applying percolation models to dielectric breakdown is that they neglect the strong spatial-temporal correlations between discrete failure events, which lead to the strongly correlated growth of connected conducting clusters from an initial seed, in contrast to percolation clusters connecting independent breakdown sites.

To illustrate a possible microscopic input to our general mesoscopic theory, we employ the DBM,[16,26] which is the original and simplest dynamical model for conducting-defect cluster growth. Consider an individual subcell in a gate dielectric, subject to an applied voltage V_a. In the DBM, a connected cluster of conducting defects (electron-trapping sites) advances with a local growth probability measure (per cluster surface area, per time step) $p_g \propto |\nabla\phi|^\eta$, proportional to the normal electric field raised to power η. For $\eta=1$, the DBM reduces to the famous diffusion limited aggregation model[27] which yields clusters with a fractal dimension $D=1.71$ in two dimensions (even with a broad class of external forcing[28]). For $\eta<1$, there is a reduced focusing of the growth events on protruding tips, and in the limit of the Eden model ($\eta=0$) the clusters have the same dimension $D=d$ as the material. In more relevant limit $\eta>1$, DBM clusters look more like familiar lightning strikes with increasing η. For $\eta\geqslant 4$, a conjectured upper critical dimension, they are effectively linear objects aligned with the applied electric field with dimension $D=1$ and negligible side branching.[29]

For our purposes, we only need the scaling with voltage of the local breakdown probability, i.e., the probability that the conducting cluster spans the subcell. At each stage of growth, the electrostatic potential satisfies Laplace's equation $\nabla^2\phi=0$ with boundary conditions $\phi=0$ on the cluster and $\phi=V_a$ at the other end of the subcell. Because this boundary-value problem is linear, $\phi\propto V_a$, the growth measure scales like $p_g \propto V_a^\eta$ regardless of the (evolving) cluster geometry. Since breakdown results from a sequence of discrete growth events, each of which has the same voltage dependence, we conclude that the subcell breakdown probability in a time τ has the expected power-law tail,

$$P_l(V,\tau) \sim cV^p \quad \text{with } p=\eta \text{ for DBM}. \tag{3}$$

We already inferred this form from the foregoing experimental data, based only upon the fiber-bundle model, but the DBM illustrates how the empirical exponent p can in principle be connected to the microscopic physics.

It is interesting to compare this result to our recent statistical theory of mechanical failure,[7,10] which predicts a power law $p=2$ from atomistic fracture mechanics. So, in this sense, nanoscale quasibrittle fracture is analogous to the dielectric breakdown with $\eta=2$. This analogy can also be understood in terms of the energy density $\Delta\epsilon$ released by a breakdown event. In fracture mechanics for a linear elastic material (away from the crack), the exponent $p=2$ comes from the scaling $\Delta\epsilon\propto\sigma^2$ with the local stress σ. In dielectric breakdown for a linear material ($\mathbf{D}=\psi\mathbf{E}$), we have a similar scaling, $\Delta\epsilon=DE/2\propto E^2$ with the electric field strength E. It is important to note, however, that the local physics of time-dependent dielectric breakdown may reflect a variety of other nonlinear effects,[30,31] especially at the nanoscale in a gate dielectric layer, and this may alter the exponents in the model. As such, they are best left as fitting parameters (see below), whose values are motivated, but not strictly constrained, by a particular microscopic model.

D. Breakdown voltage distribution

Regardless of the specific microscopic model, we can reach some general conclusions from the fiber-bundle model for failure at the mesoscale. Since the power-law tail is indestructible in the fiber-bundle[5,6] model, the distribution of breakdown voltage of each cell must have a power-law tail, $P_1(V)\sim c_0V^m$. Moreover, the exponent of the power-law tail of the strength cdf of a bundle is additive[5,6], which implies

$$m=np, \tag{4}$$

where n=number of the subcells in each potential breakdown cell. In the gate dielectric context, the additivity of the Weibull modulus m is meaningful when the thickness of the subcell is larger than the effective defect size.

Based on the asymptotic properties of strength cdf of bundle model, the distribution of breakdown voltage of one cell may be approximated as a power-law tail grafted from the left onto a Gaussian cdf at certain failure probability,

$$\text{for } V<V_{\text{gr}}: \quad p_1(V)=(m/s_0)(V/s_0)^{m-1}e^{-(V/s_0)^m}=\phi_W(V), \tag{5}$$

$$\text{for } V\geqslant V_{\text{gr}}: \quad p_1(V)=r_f e^{-(V-\mu_G)^2/2\delta_G^2}/(\delta_G\sqrt{2\pi}) = r_f\phi_G(V). \tag{6}$$

Here $p_1(V)$=probability density function (pdf) of breakdown voltage of each cell; V=applied voltage; m (Weibull modulus) and s_0=shape and scale parameters of the Weibull tail; μ_G and δ_G=mean and standard deviation of the Gaussian core if considered extended to $-\infty$; and r_f=scaling parameter required to normalize the grafted cdf such that $\int_{-\infty}^{\infty}p_1(V)\mathrm{d}V=1$. Furthermore, continuity of the Gaussian and Weibull pdfs at the grafting point requires that $\phi_W(V_{\text{gr}})=r_f\phi_G(V_{\text{gr}})$.

The grafting probability depends on the number of subcells in the cell, or the thickness of oxide layer. In practice, the thickness of layer is about 5 nm,[2,4] and it is believed that each cell consists of about three to four layers, for an effective defect size of about 1.5 nm. This implies that each breakdown cell can be statistically modeled as a bundle of three to four elements. Although this is an assumption, it gives a reasonable range for the reach of power-law tail of a bundle, which is used to make an estimate of the grafting probability that would fit the histograms. Based on the tail properties of fiber-bundle model,[6] we thus conclude that the

grafting probability is here about $10^{-7}-10^{-10}$. This probability is much lower than the grafting probability for one RVE in the context of mechanical failure, which is about $10^{-4}-10^{-3}$.[5,6,8,10]

III. LIFETIME AT CONSTANT VOLTAGE

A. Relation between lifetime and breakdown voltage

What is of primary interest for gate dielectrics is the distribution of lifetime τ at fixed voltage V_0. As already noted, this requires a model of the time evolution of dielectric breakdown. But we will see that only minimal, generic, assumptions about the microscopic physics are required. We start by considering percolation models for gate dielectrics,[4,17,18] which relate breakdown to the appearance of a spanning cluster of (uncorrelated) conducting defects. In this context, the simplest way to describe time evolution would be to postulate a differential equation for the mean defect density $\rho(t)$ in a potential breakdown cell. Motivated by the analogy with mechanical strength, it would be natural to postulate a power-law scaling of the defect production rate with the applied voltage $V_a(t)$,

$$\frac{d\rho}{dt} = \alpha(\rho)V_a^{\kappa}, \tag{7}$$

by analogy to the power law for crack growth rate (a hitherto empirical relation, to which we have recently given a theoretical basis in atomistic fracture mechanics[10,12]). Below, we will derive a similar equation from DBM. Its validity will be supported *a posteriori* by the success of our fitting of lifetime distributions for gate dielectrics.

First we show that a microscopic model is not required to relate the lifetime τ at constant voltage V_0 to the breakdown voltage V, defined by the onset of current in response to a linear voltage ramp, $V_a(t)=at$ (by analogy with the linear stress ramp used to define mechanical strength, as noted above). To supplement Eq. (7) we make only one additional assumption, namely that the breakdown occurs when the defect density reaches a critical value ρ_c, starting from an initial value $\rho_0<\rho_c$. Following Ref. 10, in both scenarios (measuring lifetime and breakdown voltage), we can then integrate the first-order separable equation (7) to obtain the identity

$$F(\rho_c) = \int_{\rho_0}^{\rho_c} \frac{d\rho}{\alpha(\rho)} = V_0^{\kappa}\tau = \frac{V^{\kappa+1}}{a(\kappa+1)}, \tag{8}$$

which implies the desired relationship

$$\tau = \frac{\beta V^{\kappa+1}}{V_0^{\kappa}}, \tag{9}$$

where $\beta=[a(\kappa+1)]^{-1}$ is a constant.

B. Microscopic physics

To illustrate a possible microscopic basis for Eq. (7), we turn again to the DBM.[16] In order to describe the spreading of a DBM cluster, we assign it a characteristic linear extent $\ell(t)$ (e.g., to its farthest tip), such that spanning of a subcell of size l_0, and thus its breakdown, occurs with high probability as $\ell \to l_0$. As the conducting cluster advances, the typical electric field at its tips grows like $|\nabla\phi| \sim |V_a/(l_0-\ell)|$, and thus the DBM growth measure (for constant tip width) implies the scaling relation

$$\frac{d\ell}{dt} = c'\left(\frac{V_a}{l_0-\ell}\right)^{\eta}, \tag{10}$$

which is analogous to the power law for the velocity of a subcritical crack. The defect density in the cell (fraction of sites in the conducting cluster) scales like $\rho \propto \ell^D$ with fractal dimension $D \geqslant 1$, which we write as $\rho=\rho_c(\ell/l_0)^D$ using the spanning breakdown criterion. Substituting into Eq. (10), we arrive at a similar expression as Eq. (7) with $\kappa=\eta$,

$$\frac{d\rho}{dt} = \alpha(\rho)V_a^{\eta} \tag{11}$$

and

$$\alpha(\rho) = \frac{c''\rho^{(D^2-1)/D}}{l_0^{\eta+1}(\rho_c^{1/D}-\rho^{1/D})^{\eta}} \tag{12}$$

for a constant c''. Note that the defect production rate diverges at a critical concentration ρ_c, but this is not a percolation transition. Instead, ρ_c is now the mean concentration of a spanning DBM cluster, although this microscopic detail does not affect the general relationship (9).

In the mechanical failure,[10] it has been shown that the exponent of the power-law tail of strength cdf of a nanostructure is equal to the exponent of the power law for the nanocrack growth rate. Equation (11) presents a similar analogy where the exponent of the power-law tail of breakdown voltage for each potential defect cluster is equal to the exponent of the power law for the rate of growth of the defect cluster.

C. Lifetime distribution

We now convert the pdf [Eqs. (5) and (6)] of the breakdown voltage V into a cdf for lifetime τ at voltage V_0, using the scaling relation (9) between these two random variables. This leads to a lifetime distribution of one breakdown cell,

$$\text{for } \tau < \tau_{\text{gr}}: \quad P_1(\tau) = 1 - \exp[-(\tau/s_\tau)^{m/(\kappa+1)}], \tag{13}$$

$$\text{for } \tau \geqslant \tau_{\text{gr}}: \quad P_1(\tau) = P_{\text{gr}} + \frac{r_f}{\delta_G\sqrt{2\pi}} \times \int_{\gamma\tau_{\text{gr}}^{1/(\kappa+1)}}^{\gamma\tau^{1/(\kappa+1)}} e^{-(\tau'-\mu_G)^2/2\delta_G^2} d\tau', \tag{14}$$

where $\gamma=\beta^{-1/(\kappa+1)}V_0^{\kappa/(\kappa+1)}$, $\tau_{\text{gr}}=\beta V_0^{-\kappa}V_{\text{gr}}^{\kappa+1}$, $s_\tau=s_0^{\kappa+1}\beta V_0^{-\kappa}$, and $P_{\text{gr}}=P_1(\tau_{\text{gr}})$.

According to this result, the Weibull moduli of the lifetime distribution and the breakdown voltage distribution are related by $m_l=m/(\kappa+1)$. Using Eq. (4), we arrive at the following relation among the exponents:

$$m_l = \frac{pn}{\kappa+1}. \tag{15}$$

This equation indicates that, for the same dielectric material, the Weibull modulus of breakdown lifetime increases in proportion to the thickness of oxide layer (i.e., as n increases).

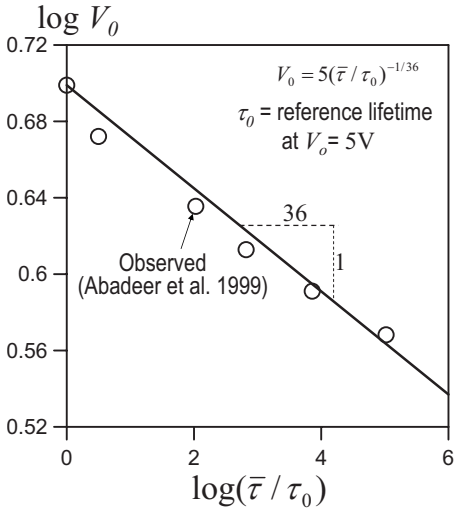

FIG. 5. Voltage-mean lifetime relationship of gate dielectrics.

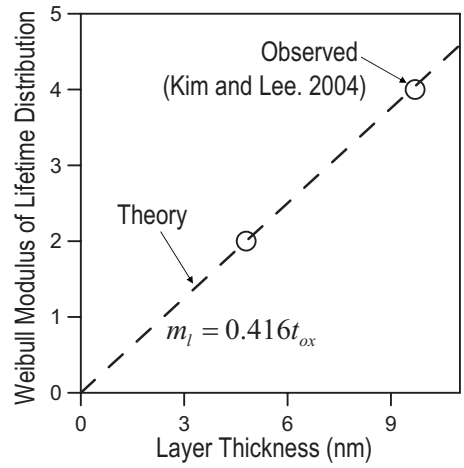

FIG. 6. Effect of layer thickness on the Weibull modulus of lifetime distribution.

Our simple microscopic model based on the DBM implies $m_l=(\eta n)/(\eta+1)$.

IV. EXPERIMENTAL VALIDATION

Our theory of lifetime statistics provides a good fit to the existing experimental data for high-k gate dielectrics. We start by testing Eq. (9) which implies a relation between the applied voltage V_0 and the mean lifetime $\bar{\tau}$ for a given gate dielectric, $V_0 \propto \bar{\tau}^{-1/k}$. As shown in Fig. 5, this power law gives a close fit of the experimental data,[32] although the inferred exponent $\kappa=36$ is much larger than the values of η used in simulations of fractal DBM clusters, as well as the value $\eta=2$ discussed above. One could also try to fit the data in Fig. 5 by an exponential function,[2,32] but this could not be reconciled with the clear experimental evidence of Weibull statistics, and thus the presumed power-law tails of failure distributions, as noted above.

It is interesting that a similar paradox arises in structural failure, where the exponent κ inferred from lifetime statistics is also large, and much larger than would be expected from microscopic theories of fracture. In that case, a likely resolution is based on the hypothesis of hierarchical couplings of failure from the nanoscale to the mesoscale.[10] Admittedly, for thin gate dielectrics, which are already at the nanoscale (and thus can consist of at most several atomic-scale breakdown subcells), this argument is harder to justify. Perhaps the large fitted value $\eta=\kappa$ reflects an approximation to a microscopic exponential dependence, which could, e.g., arise from irreversible activated hopping over an energy barrier, biased by the electric field.[31]

In any case, regardless of the microscopic dynamical model, our mesoscopic statistical theory makes predictions in good agreement with experiments. For example, our prediction [Eq. (15)] agrees very well with Kim and Lee's recent experimental observations on the dependence of Weibull modulus on the layer thickness.[2] Their data show that the Weibull modulus doubles (from 2 to 4) when the gate dielectric thickness is almost doubled (from 4.8 to 9.7 nm, or EOT of 1.4–2.5 nm), as shown in Fig. 6.

The mesoscopic theory also provides a good fit of experimental lifetime distributions. The curves in Fig. 1 show that the above distribution [Eqs. (13) and (14), with Eq. (2)] based on the analogy with mechanical strength provides good fits of the lifetime histograms observed by Kim and Lee[2] on high-k dielectrics with an oxide layer of thickness of about 4.8–5 nm. Note that the curves have a kink which is centered at the grafting point separating two segments, of which the lower one is a straight line (representing the Weibull distribution) and the upper one deviates from the straight line systematically to the right. It follows from the location of the kink that the number of cells in this gate dielectric is on the order of 10^7 (i.e., the area A_0 of each cell is about 100 nm^2). This is consistent with the order of magnitude obtained from various percolation models.[19,20] Based on the optimum fits by the present theory, the Weibull modulus m_l is found to be 2.5–3.5, which is approximately equal to the number of elements in the bundle (≈ 3) representing each potential breakdown cell [Fig. 4(c)] (it is also equal to the number of subcells n in each breakdown cell). Interestingly, this is predicted by our foregoing simple microscopic DBM calculations, which require $p=\kappa=\eta$, and thus for $\eta \gg 1$ (inferred from the fitting above): $p/(\kappa+1)=\eta/(\eta+1) \approx 1$. Thus, Eq. (15) becomes $m_l \approx n$.

The same authors also measured the effect of gate area A (cm^2) on the median lifetime τ_{50} (defined as the time to 50% failure frequency, in seconds). Based on the aforementioned calibration of the model, one can extrapolate the lifetime cdfs of the gate dielectrics for different gate areas by Eq. (2). Figure 3 shows that the predicted τ_{50} agrees very well with the τ_{50} observed in the experiments. In the log-log plot of τ_{50} and A, the experimentally observed points cannot be optimally fitted by a straight line.[2] This indicates an insufficiency of the two-parameter Weibull distribution, in which τ_{50} must be a power-law function of A (similar to the power law for the mechanical size effect on the lifetime of structures[7,10]). In view of Eq. (2), the nonlinearity in this plot, i.e., the deviation from power law, is caused by the effect of gate area of the dielectric on the type of lifetime cdf.

The effect of gate area on the mean lifetime $\bar{\tau}$ can be numerically calculated on the basis of Eq. (2). Exploiting the

similarity between the lifetime distributions of gate dielectrics and of quasibrittle structures, one can express $\bar{\tau}$ by the approximate formula

$$\bar{\tau} = [(C_a/A) + (C_b/A)^{r/m}]^{(\kappa+1)/r} \tag{16}$$

derived by asymptotic matching.[10] Parameters C_a, C_b, and r can be determined by three asymptotic matching conditions: $[\bar{\tau}]_{A\to A_0}$, $[d\bar{\tau}_N/dA]_{A\to A_0}$, and $[\bar{\tau}A^{(\kappa+1)/m}]_{A\to\infty}$.

V. CONCLUSION

We have developed a theory of dielectric breakdown statistics based on an analogy between the mechanical failure of structures under stress and the breakdown of dielectrics under constant voltage, leading to a fiber-bundle model of independent failure cells. The theory can also be connected to microscopic statistical models of dielectric breakdown to predict some of its assumptions, although our results are largely insensitive to microscopic details. This general analogy may find diverse applications.

Here our focus is on the breakdown of thin high-k gate dielectrics. The relationship between the lifetime histograms and the size effect on the mean dielectric lifetime, deduced from the theory, is advantageous for lifetime testing because far fewer tests are needed to determine a mean than a histogram. Testing the mean lifetime for three significantly different gate areas will permit determining the size effect curve, from which the lifetime histogram can be inferred.

Lifetime testing could be simplified even more if the exponents p in Eq. (3) and κ in Eq. (7) could be directly measured or predicted from a microscopic theory. The lifetime cdf could then be inferred from κ and the histogram of voltage breakdown, which does not necessitate long measurement periods. Here, we used the DBM (Ref. 16) to obtain the relation $p=\kappa=\eta$, where the stochastic growth measure on a defect cluster is proportional to the normal electric field intensity raised to the power η. Our fitting of lifetime statistics implies very strong nonlinearity in the growth probability, $\eta \gg 1$, which differs from typical DBM simulations focusing on cluster morphology, but the generic prediction $p=\kappa$ agrees well with our analysis of the experimental dependence of the Weibull modulus on gate dielectric thickness. In any case, our results are not tied to the DBM or any other specific microscopic model, as long as two generic hypotheses [Eqs. (3) and (7)] about power-law scaling are satisfied, at least approximately.

Recently it has been attempted to fit the kinked histograms of strength tests of the type seen in Fig. 1 by the three-parameter Weibull distribution with a finite strength threshold. When merely a few hundred tests were made, the histogram fits were satisfactory. However, the corresponding predictions for the size effect were unrealistic and extrapolations to the far-out tail differed enormously from the finite chain model. In Refs. 8 and 10 it was argued on the basis of atomistic fracture mechanics that a finite threshold is impossible. The same probably holds true for the dielectric breakdown voltage and the lifetime.

ACKNOWLEDGMENTS

Partial financial support for the underlying statistical theory was received under NSF Grant No. CMS-0556323 to Northwestern University.

[1] S. Chatterjee, Y. Kuo, J. Lu, J.-Y. Tewg, and P. Majhi, Microelectron. Reliab. **46**, 69 (2006).
[2] Y.-H. Kim and J. C. Lee, Microelectron. Reliab. **44**, 183 (2004).
[3] G. D. Wilk, R. M. Wallace, and J. M. Anthony, J. Appl. Phys. **89**, 5243 (2001).
[4] J. H. Stathis, J. Appl. Phys. **86**, 5757 (1999).
[5] Z. P. Bažant and S.-D. Pang, Proc. Natl. Acad. Sci. U.S.A. **103**, 9434 (2006).
[6] Z. P. Bažant and S.-D. Pang, J. Mech. Phys. Solids **55**, 91 (2007).
[7] Z. P. Bažant, J.-L. Le, and M. Z. Bazant, Proceedings of the 17th European Conference on Fracture (European Structural Integrity Society, Brno, Czech Republic, 2008), pp. 78–92.
[8] S.-D. Pang, Z. P. Bažant, and J.-L. Le, Int. J. Fract. **154**, 131 (2008).
[9] J.-L. Le and Z. P. Bažant, Dent. Mater. **25**, 641 (2009).
[10] Z. P. Bažant, J.-L. Le, and M. Z. Bazant, Proc. Natl. Acad. Sci. U.S.A. **106**, 11484 (2009).
[11] Z. P. Bažant and J.-L. Le, Eng. Failure Anal. **16**, 2521 (2009).
[12] J.-L. Le, Z. P. Bažant, and M. Z. Bazant, J. Phys. D **42**, 214008 (2009).
[13] P. D. Beale and P. M. Duxbury, Phys. Rev. B **37**, 2785 (1988).
[14] D. R. Bowman and D. Stroud, Phys. Rev. B **40**, 4641 (1989).
[15] B. K. Chakraborti and L. G. Benguigui, *Statistical Physics of Fracture and Breakdown in Disordered Solids* (Clarendon, Oxford, 1997).
[16] L. Niemeyer, L. Pietronero, and H. J. Wiesmann, Phys. Rev. Lett. **52**, 1033 (1984).
[17] R. Degraeve, G. Groeseneken, R. Bellens, J. L. Ogier, M. Depas, P. J. Roussel, and H. E. Maes, IEEE Trans. Electron Devices **45**, 904 (1998).
[18] T. Miyakawa, T. Ichiki, J. Mitsuhashi, K. Miyamoto, T. Tada, and T. Koyama, Jpn. J. Appl. Phys., Part 1 **46**, 691 (2007).
[19] D. J. Dumin, J. R. Maddux, R. S. Scott, and R. Subramoniam, IEEE Trans. Electron Devices **41**, 1570 (1994).
[20] J. Suné, I. Placencia, N. Barniol, E. Farrés, F. Martín, and X. Aymerich, Thin Solid Films **185**, 347 (1990).
[21] E. J. Gumbel, *Statistics of Extremes* (Columbia University Press, New York, 1958).
[22] E. Castillo, *Extreme Value Theory in Engineering* (Academic, New York, 1988).
[23] M. Z. Bazant, Phys. Rev. E **62**, 1660 (2000).
[24] R. van Der Hofstad and F. Redig, J. Stat. Phys. **122**, 671 (2006).
[25] G. Györgyi, N. R. Moloney, K. Ozogány, and Z. Rácz, Phys. Rev. Lett. **100**, 210601 (2008).
[26] L. Pietronero and H. J. Wiesmann, Z. Phys. B: Condens. Matter **70**, 87 (1988).
[27] T. A. Witten and L. M. Sander, Phys. Rev. Lett. **47**, 1400 (1981).
[28] M. Z. Bazant, J. Choi, and B. Davidovitch, Phys. Rev. Lett. **91**, 045503 (2003).
[29] M. B. Hastings, Phys. Rev. Lett. **87**, 175502 (2001).
[30] P. P. Apte and K. C. Saraswat, IEEE Trans. Electron Devices **41**, 1595 (1994).
[31] J. W. McPherson, R. B. Khamankar, and A. Shanware, J. Appl. Phys. **88**, 5351 (2000).
[32] W. W. Abadeer, A. Bagramian, D. M. Conkie, C. W. Griffin, E. Langlois, B. F. Lloyd, R. P. Mallette, J. E. Massucco, J. M. Mckenna, S. W. Mittl, and P. H. Noel, IBM J. Res. Dev. **43**, 407 (1999).